GUNSTOCK DIMENSIONS

GUNSTOCK MEASUREMENTS

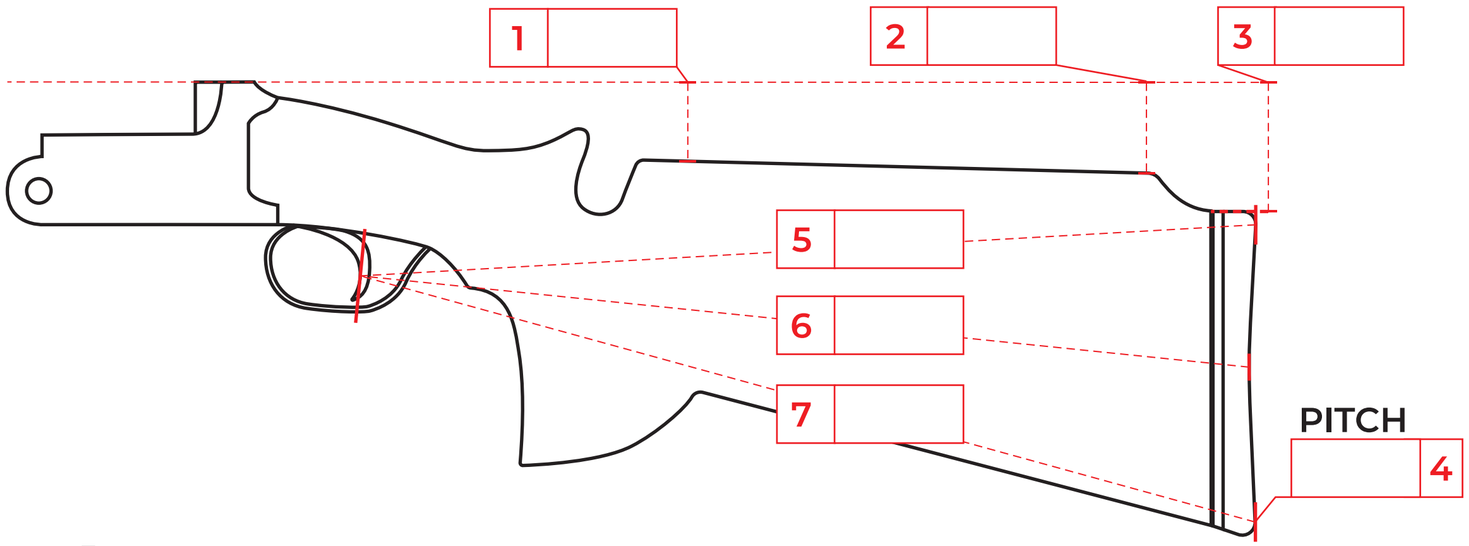

CAST

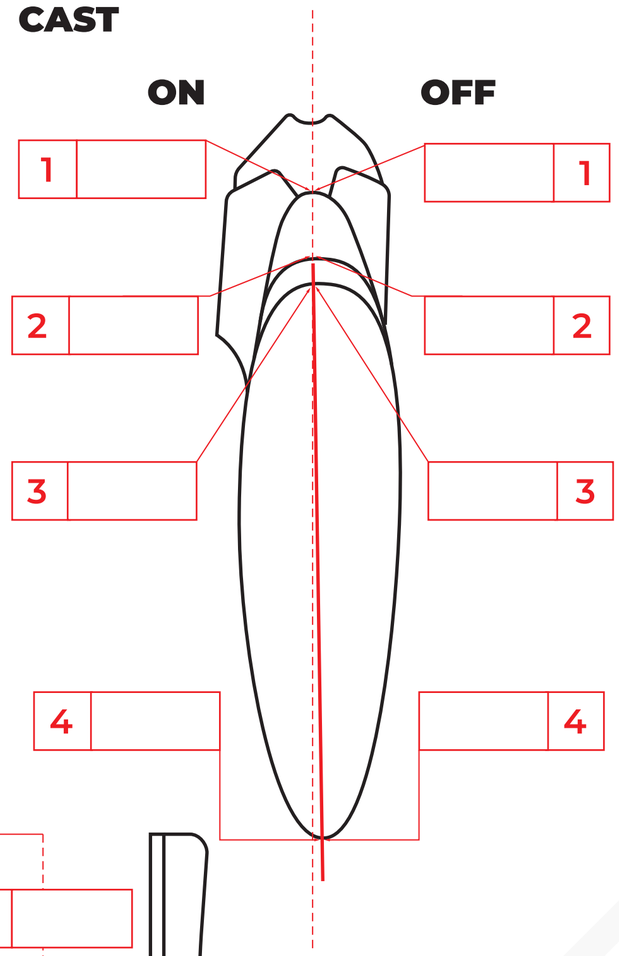

GRIP WIDTH

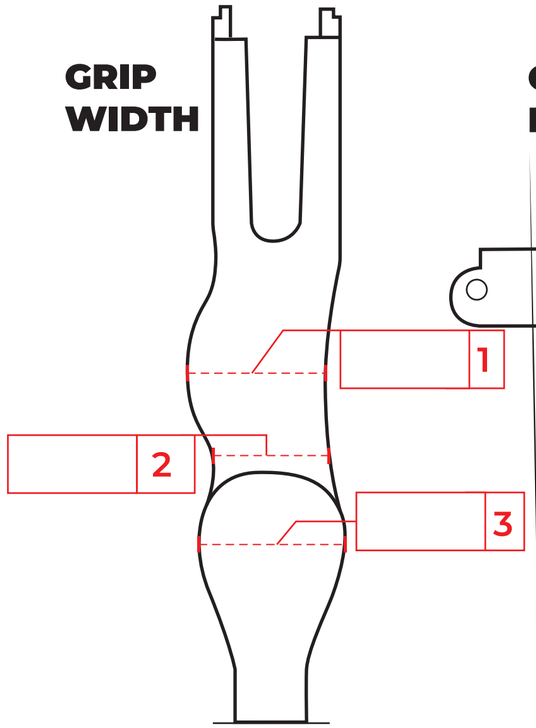

GRIP MEASUREMENTS

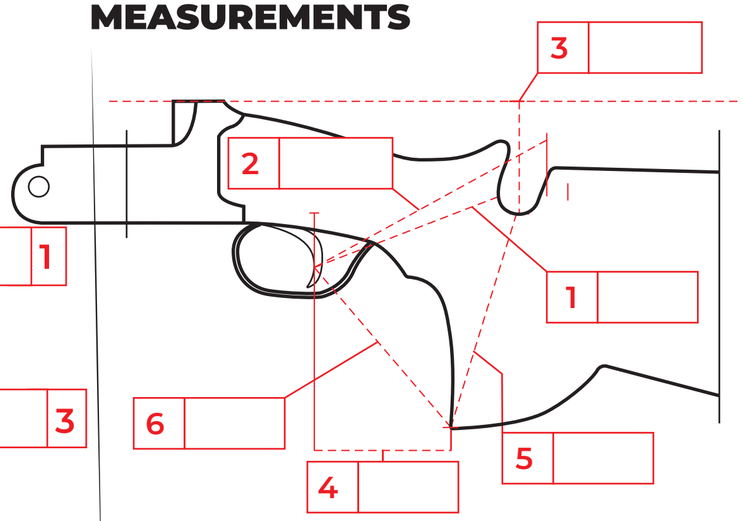

RECOIL PAD

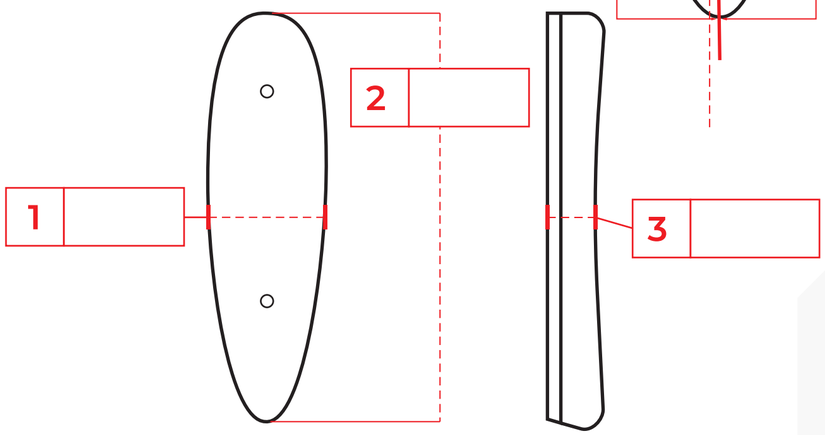

Gun: _____

Model: _____

Name: _____

Process No: _____